Exploded View

产品编码(Product model):	22022511003336
客户编码(Customer No):	G0000340
客户型号(Customer model):	MCD1-55HRFNX-QRD0W(GA)
订单编码(Order Product Code):	62225-H6457217

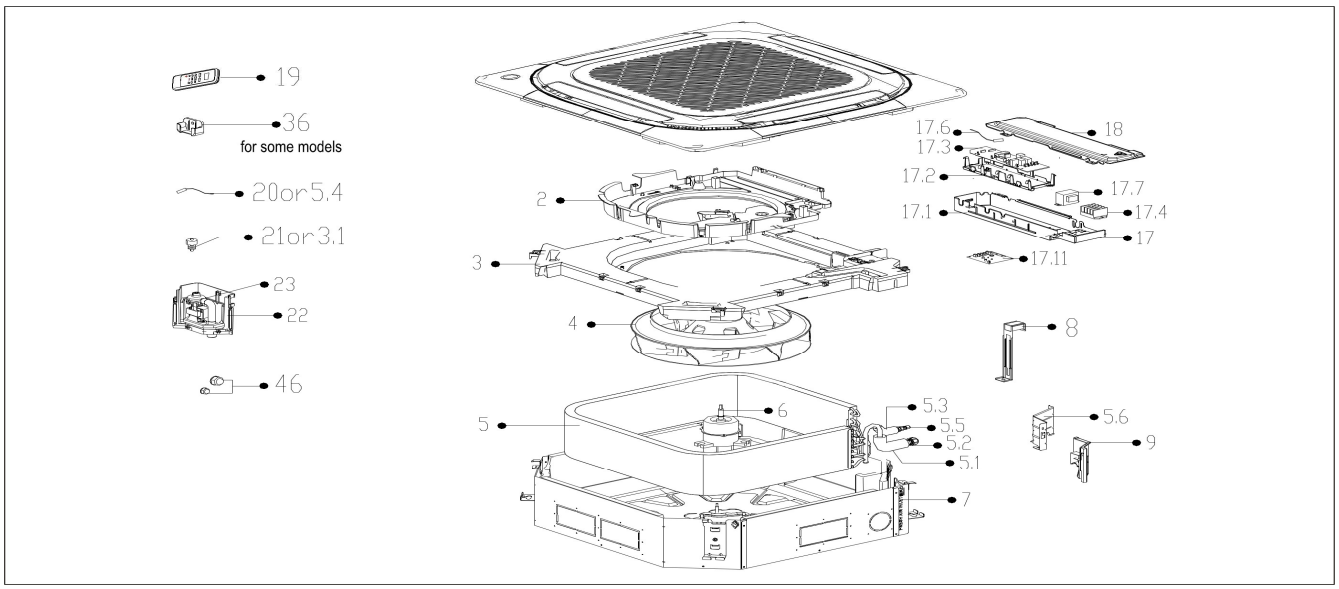

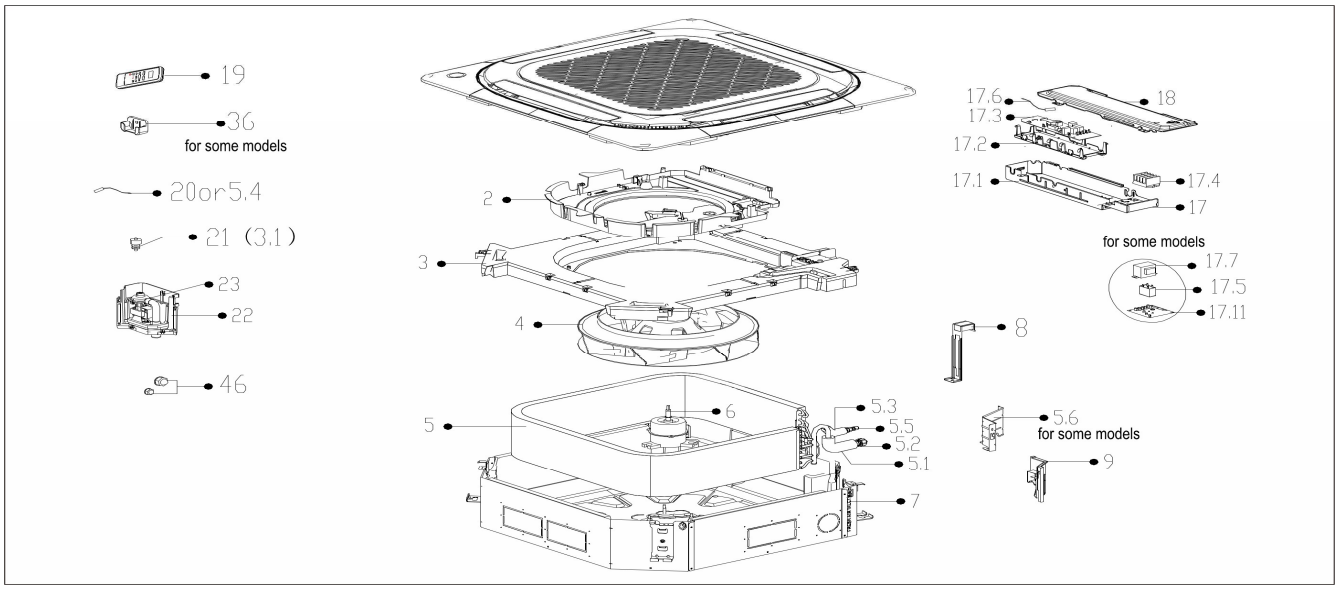

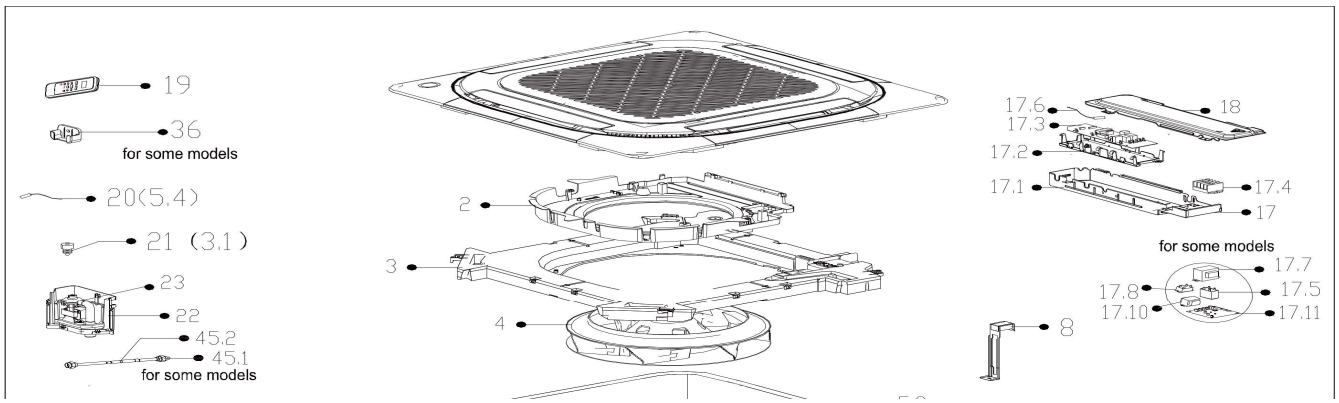

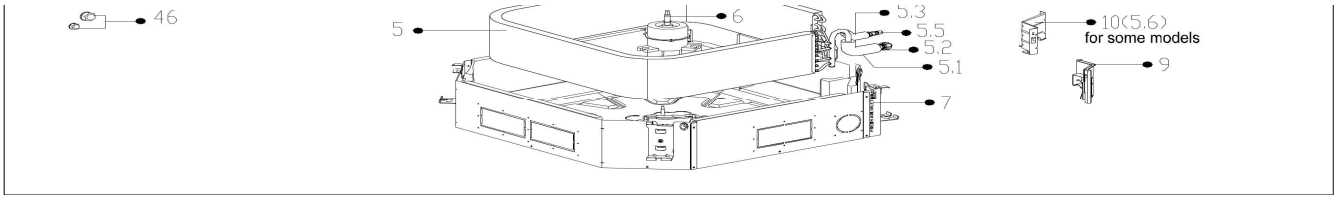

EX_ID	Spare Parts Code	Part Name(CN)	Part Name(EN)	Qty.	Remark2	Part Status	Drawing No	MIN_ORDER_QTY	Long Term Material(Y or N)	High Rate of Replacement(Y or N)
2	12122500002029	导风圈	Ventilation ring	1		In Use	KFR-120Q/DN8Y-D-4	1		
3	12822500000450	接水盘组件	Water collector subassembly	1		In Use	KFR-72Q/DN8Y-D.3			
3.1	17400511001044	水位开关	Water Level Switch	1		In Use	SWKG-350B			
4	12100103001484	离心风轮	Centrifugal Fan	1		In Use	LX-476*170*12-7NA	1		
5	15822500002379	蒸发器部件	Evaporator Assembly	1		In Use	EU-KFR121Q/BP3NXY-D(RD0)-W(GA).ZL	1		
5.1	15122500003256	蒸发器输出管组件	Evaporator outlet pipe subassembly	1		In Use	EU-KFR121Q/BP3NXY-D(RD0)-W(GA).ZL.4	1		
5.2	15500404000005	管螺母	Pipe Nut	1	A01=6.35mm(1/4in);B02=9.52mm(3/8in);C03=12.7mm(1/2in);D04=15.9mm(5/8in);E05=19mm(3/4in);F07=22mm(7/8in);	In Use	GLM-D04A			
5.3	15122500003257	蒸发器输入管组件	Evaporator inlet pipe subassembly	1		In Use	EU-KFR121Q/BP3NXY-D(RD0)-W(GA).ZL.3	1		
5.5	15500209000002	检测阀	Detection valve	1		In Use	JCF-02	1		
5.6	12222500002092	蒸发器连接板组件	Evaporator fixing board subassembly	1		In Use	EU-KFR105Q/BP3N8Y-D.2	1		
6	11002015012308	无刷直流电机	Brushless DC Motor	1		In Use	ZKFN-125-8-1			
7	12222500002052	底盘部件	Chassis assembly	1		In Use	KFR-120Q/SDBP3N8Y-D.1	1		
8	12222500000090	蒸发器固定钩	Evaporator fixing hanger	2		In Use	CE-KFR160Q4/BP3N1Y-D-10	1		
9	12122500002028	出管密封板组件	Pipe fixing board subassembly	1		In Use	KFR-72Q/DN8Y-D.9	1		
17	17222500003320	轻商嵌入式室内电控盒组件	Electronic control box subassembly	1		In Use	EU-KFR105Q/BP3N8Y-D(RD0)-W(GA).JD.Q.NK.DK1.1	1		
17.2	12122500002047	接线底板	Insulation plate	1		In Use	EU-KFR105Q/BP3N8Y-D-8	1		
17.3	17122500005242	轻商嵌入式室内主控板组件	Main control board subassembly	1		In Use	EU-KFR105Q/BP3N8Y-D(RD0)-W(GA).JD.Q.NK.NK2.2.2			
17.4	17400401000032	接线座(5位)(中达/源峰)	Terminal	1		In Use	JXZ-AZ5HG1-B(RS9413-5F/YF2004A)	1		
17.6	11201007003424	室温传感器	Room Temperature Sensor	1		In Use	CGQ-WD/SW4100-L350-XHBCP2BL-P300-HT1.0	0		
17.7	17400306001543	电抗器(RoHS)	Reactor	1		In Use	R0230	1		
17.11	17122000048868	湿度传感器模块板组件	Humidity sensor subassembly	1		In Use	CAX350GC1.ZY001.JD.TY.BSD.SCG.1	1		
18	12222500002033	电控盒盖	Cover of electronic control box	1		In Use	KFR-72Q/DN8Y-D-7	1		
19	17317000007594	遥控器	Remote controller	1		In Use	RG10A(B2S)/BGEF	1		
20	11201007003442	管温传感器	Pipe Temperature Sensor	1		In Use	CGQ-WD/GW4100-L850-XACP2-P800	0		
22	12122500002027	外置水泵盒组件	External water pump box assembly	1		In Use	KFR-72Q/DN8Y-D.5	1		
23	11001010001757	感应泵	Induction Pump	1		In Use	YKB-12-2-3			
46	15500406000003	铜螺母	Copper nut	1	A01=6.35mm(1/4in);B02=9.52mm(3/8in);C03=12.7mm(1/2in);D04=15.9mm(5/8in);E05=19mm(3/4in);F07=22mm(7/8in);	In Use	TLM-D04	0	N	N
46	15500406000010	铜螺母	Copper nut	1	A01=6.35mm(1/4in);B02=9.52mm(3/8in);C03=12.7mm(1/2in);D04=15.9mm(5/8in);E05=19mm(3/4in);F07=22mm(7/8in);	In Use	TLM-B02	0	N	N